300 S. DAYTON ST.
DAVISON, MI 48423
PH: 810-503-9000
FAX:810-653-8714

1002-88

DESCRIPTION:
CONNECTS 8 IN. CLAY TO 8 IN. CI/PL

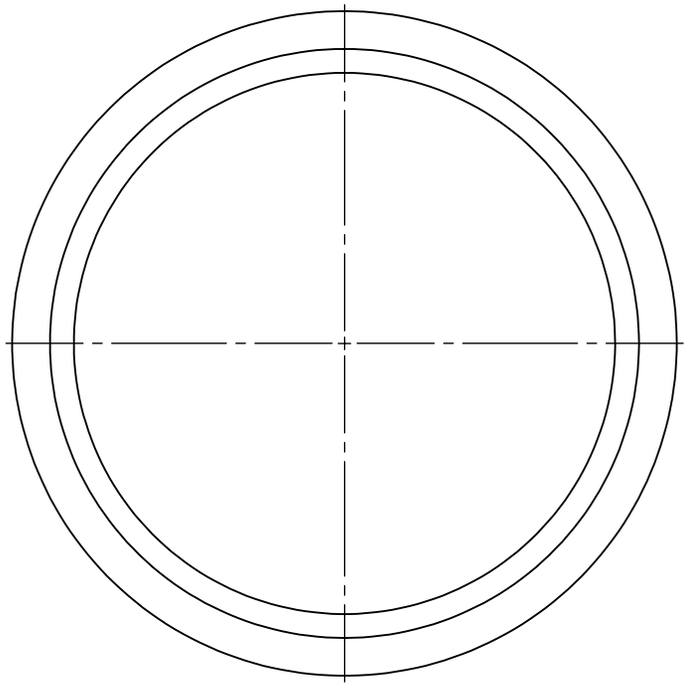

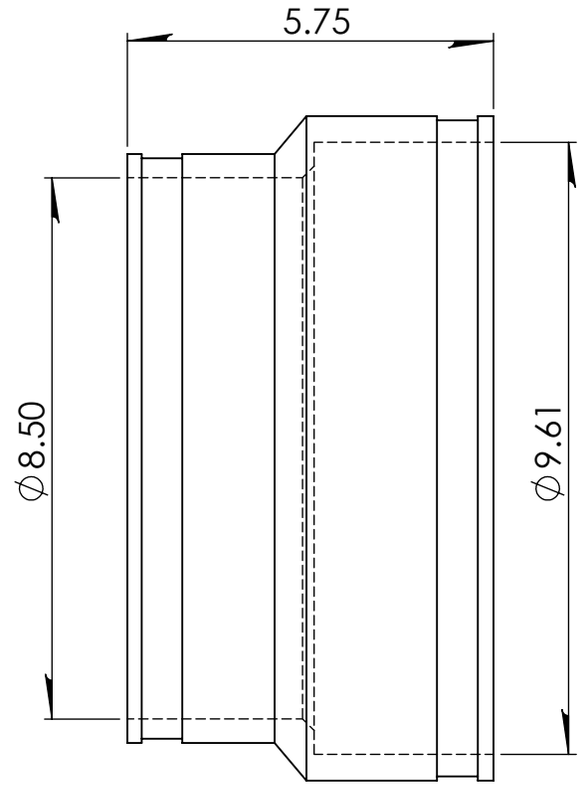

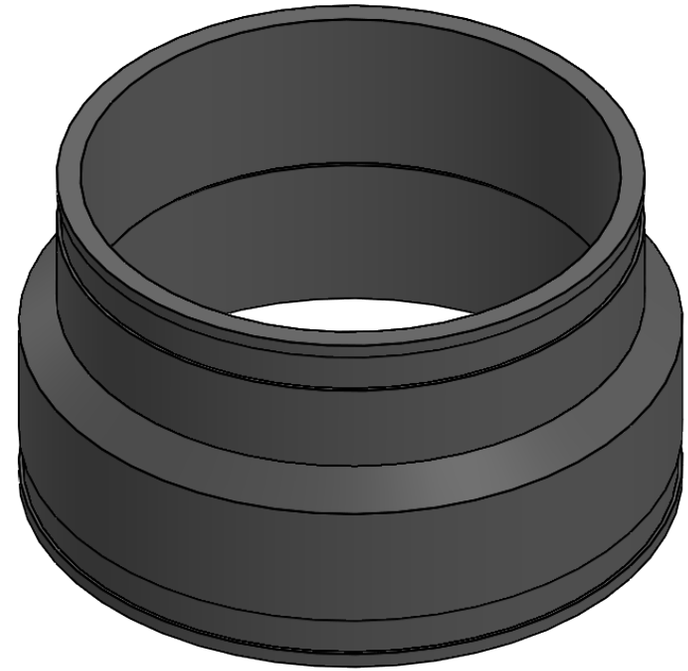

NOTE:

PROPRIETARY AND CONFIDENTIAL
THE INFORMATION CONTAINED IN THIS DRAWING IS THE SOLE PROPERTY OF FERNCO, INC. ANY REPRODUCTION IN PART OR AS A WHOLE WITHOUT THE WRITTEN PERMISSION OF FERNCO, INC. IS PROHIBITED.

TOLERANCES:
FRACTIONAL ± 1/4"
.XX= ±.06
ANG.= ±3°
UNLESS OTHERWISE SPECIFIED

MATERIAL	PVC	CLAMPS USED	300 SERIES STAINLESS	UNITS: INCHES	SIZE: A
PART WEIGHT		INSTALLATION TORQUE	60 IN · LBS	3RD ANGLE PROJECTION DO NOT SCALE DRAWING	
BOX QUANTITY		MIN/MAX TEMP.	-30/140 °F		
PRESSURE TESTED		ASTM	C1173 / D5926		

AUTHOR: ELI MILLER
SCALE: NOT TO SCALE
CHECKER:
DATE: 9/17/2018
SHEET 1 OF 1